AUDIOVOX®

MOBILE VIDEO

2016
FULL LINE CATALOG

Quality ENTERTAINMENT ON THE MOVE

As technology has evolved so too has the way we access in vehicle entertainment. Electronic downloads, streaming media and movies and videos on-demand are at our fingertips and Audiovox has made sure that we deliver the same experience to our Rear Seat Entertainment Systems.

Our new Overhead and Headrest systems incorporate HDMI/MHL inputs that give the user direct connection to any HDMI/MHL enabled device: smart phones, tablets, even Smart-TV devices including a DVD player so you can still use that library of DVD's that you have collected over the years.

Our NEW 8" Android custom headrest system integrates tablet technology with DVD so that consumers get maximum connectivity without sacrificing DVD capability. It is one of three new systems that bring tablet technology to the vehicle. Our full-featured Universal Seat-back Android Tablet System was specifically designed to deliver all the value-added benefits of on road mobility with the added capability of removal for use in the home. The universal mount keeps the tablet safe and secure, and all charged up! Enjoy audio playback through Audiovox's headphones and/or audio playback through the vehicle's sound system, adding versatility to the system.

Already own a tablet that you use for rear seat entertainment?.... Then use our Universal Tablet Docking System, complete with its own adjustable bracket and 2 USB charging ports. This system is built for the road and will securely mount your tablet making it as safe as an installed system.

Our headrests are second to none. Complying with rigid OE standards while adding style and sophistication to the design and manufacturing process. Ours is a true vehicle specific program that meets and/or exceeds the stringent Federal Motor Safety Standards. The color, material and grain pattern right down to the stitching match the factory headrests. We deliver a variety of flexible configurations with assemblies constructed to custom match your factory vehicle, all with-in your budget needs.

Quality design and manufacturing, expanded connectivity for your enhanced entertainment are the hallmarks of the Audiovox mobile line. Your commitment and loyalty keeps Audiovox committed to excellence in leading your journey for rear seat entertainment.

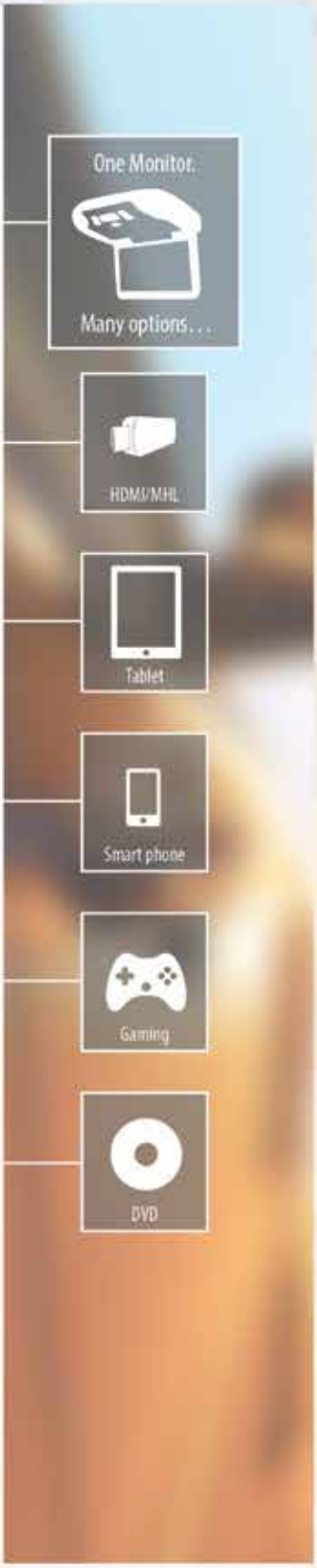

NETFLIX HBO GO YouTube hulu Google play amazon vudu

More Apps available through your Mobile Device App Store.
The trademarks depicted are the trademarks of their respective owners.

TABLE OF CONTENTS

CONNECTIVITY STORY	1
8” CUSTOM HEADREST SYSTEMS	2
8” ACTIVE SEAT-BACK SYSTEMS	3
8” ELECTRONIC SUB-ASSEMBLIES	4
7” CUSTOM HEADREST SYSTEMS	5
7” ACTIVE SEAT-BACK SYSTEMS	6
7” ELECTRONIC SUB-ASSEMBLIES	7
OVERHEAD SYSTEMS	8
AUDIOVOX MTG OVERHEAD SYSTEMS	9
AUDIOVOX MTG HEADREST SYSTEMS	10
ANDROID DOCKING SOLUTIONS	11
UNIVERSAL DOCKING SOLUTIONS	12
ACCESSORIES	13
DISPLAYS	14
OVERHEAD SYSTEMS CHART	15

Connecting WITH ENHANCED Entertainment

Audiovox is delivering more choices in device connectivity, more capability to enhance entertainment and more value than ever before. Our NEW Overhead and Headrest systems incorporate certified HDMI/MHL inputs, giving the user direct connection to any HDMI/MHL enabled device: smart phones, tablets, even Smart-TV devices. *Audiovox's* mobile video products provide delivery of high-definition audio and video content without losing the use of the DVD, making your entertainment possibilities literally endless. *Audiovox's* extensive quality improvements and value enhancements to our Headrest and Overhead Systems only strengthen an already broad and diverse product line delivering better electronics, cleaner aesthetics, optimized features, and expanded functionality. *Audiovox's* products not only surpass demanding OE standards, they also exceed consumer preferences in style, fit and function.

Note: More Apps available through your Mobile Device App Store. The trademarks depicted are the trademarks of their respective owners.

8” Custom Headrest Systems

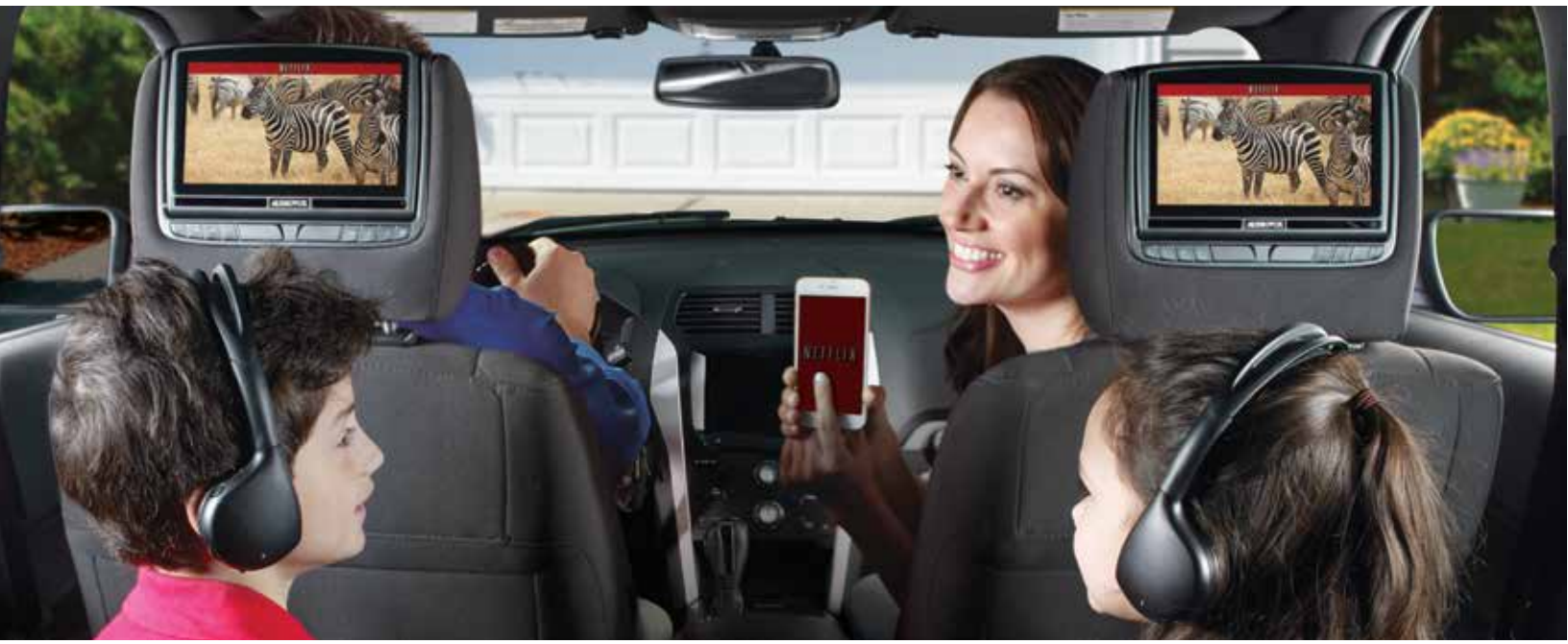

UNIVERSAL FEATURES

- Headrest monitors with 8” Digital LED back-lit panels
- Resolution (800 x RGB x 480)
- Adjustable viewing angles
- Certified HDMI/MHL inputs
- A/V Input & Output
- RF Output for hard-wired FM modulator connection (FMDIRB required)
- Game port (MVGP1 required – plug-in game module, pre-loaded with (54) 32-bit video games and 2 wireless controllers)
- USB input with charging
- Dual channel wireless headphones
- Full band FM transmitter
- 2 Remote controls included with hidden away Junction Box

ANDROID ONLY FEATURES

- Touch screen control with user friendly interface (Android based monitors)
- Android operating system (4.2.2)
- Fast dual core processor
- Built-in Camera & Microphone
- Built-in memory (8GB - Expandable to 40GB)
- Built-in Wi-Fi (needs 3G/4G) hot-spot to feed Internet access while driving outside of Wi-Fi coverage
- SD Card input (also used for memory expansion)

AVX8HH01

Dual DVD with HDMI/MHL Monitor Systems

- DVD players play DVD’s and CD’s in both monitors
- USB reader with charging in both monitors
- Certified HDMI/MHL inputs in both monitors

AVX8HZ01

Dual DVD with Single Android Touch-screen Monitor System

- DVD players play DVD’s and CD’s in both monitors
- USB reader with charging in both monitors
- Certified HDMI/MHL inputs in one monitor

AVX8ZZ01

Dual Touch-screen Monitor Systems with Android, DVD, HDMI/MHL

- Android Operating System in both monitors
- DVD players play DVD’s and CD’s in both monitors
- USB reader with charging in both monitors
- Certified HDMI/MHL inputs in both monitors

8” Active Seat-back Systems

UNIVERSAL FEATURES

- Seat-back monitors with 8” Digital LED back-lit panels
- Resolution (800 x RGB x 480)
- Adjustable viewing angles
- Certified HDMI/MHL inputs
- A/V Input & Output
- RF Output for hard-wired FM modulator connection (FMDIRB required)
- Game port (MVGP1 required – plug-in game module, pre-loaded with (54) 32-bit video games and 2 wireless controllers)
- USB input with charging
- Dual channel wireless headphones
- Full band FM transmitter
- 2 Remote controls included with hidden away Junction Box

ANDROID ONLY FEATURES

- Touch screen control with user friendly interface (Android based monitors)
- Android operating system (4.2.2)
- Fast dual core processor
- Built-in Camera & Microphone
- Built-in memory (8GB - Expandable to 40GB)
- Built-in Wi-Fi (needs 3G/4G) hot-spot to feed Internet access while driving outside of Wi-Fi coverage
- SD Card input (also used for memory expansion)

AVXSB8HH01

Dual DVD with HDMI/MHL Monitor Systems

- DVD players play DVD’s and CD’s in both monitors
- USB reader with charging in both monitors
- Certified HDMI/MHL inputs in both monitors

AVXSB8HZ01

Dual DVD with Single Android Touch-screen Monitor System

- DVD players play DVD’s and CD’s in both monitors
- USB reader with charging in both monitors
- Certified HDMI/MHL inputs in one monitor

AVXSB8ZZ01

Dual Touch-screen Monitor Systems with Android, DVD, HDMI/MHL

- Android Operating System in both monitors
- DVD players play DVD’s and CD’s in both monitors
- USB reader with charging in both monitors
- Certified HDMI/MHL inputs in both monitors

8” Electronic Sub-assemblies

UNIVERSAL FEATURES

- 8” Dual Digital LED back-lit panels
- Resolution (800 x RGB x 480)
- Adjustable viewing angles
- Certified HDMI/MHL inputs
- A/V Input & Output
- RF Output for hard-wired FM modulator connection (FMDIRB required)
- Game port (MVGP1 required – plug-in game module, pre-loaded with (54) 32-bit video games and 2 wireless controllers)
- USB input with charging
- Dual channel wireless headphones
- Full band FM transmitter
- 2 Remote controls included with hidden away Junction Box

ANDROID ONLY FEATURES

- Touch screen control with user friendly interface (Android based monitors)
- Android operating system (4.2.2)
- Fast dual core processor
- Built-in Camera & Microphone
- Built-in memory (8GB - Expandable to 40GB)
- Built-in Wi-Fi (needs 3G/4G) hot-spot to feed Internet access while driving outside of Wi-Fi coverage
- SD Card input (also used for memory expansion)

AVXSUBPKGHH

Dual DVD with HDMI/MHL Monitor Systems

- DVD players play DVD’s and CD’s in both monitors
- USB reader with charging in both monitors
- Certified HDMI/MHL inputs in both monitors

AVXSUBPKGHZ

Dual DVD with Single Android Touch-screen Monitor System

- DVD players play DVD’s and CD’s in both monitors
- USB reader with charging in both monitors
- Certified HDMI/MHL inputs in one monitor

AAVXSUBPKGZZ

Dual Touch-screen Monitor Systems with Android, DVD, HDMI/MHL

- Android Operating System in both monitors
- DVD players play DVD’s and CD’s in both monitors
- USB reader with charging in both monitors
- Certified HDMI/MHL inputs in both monitors

SUB801

8” Replacement Headrests

- Dual replacement custom headrests (material, color, grain, stitch, piping matches factory headrests)
- Monitor cables and sub tray pre-installed

SUBSB1

8” Active Seat-back Casing

- Dual seat-back with custom mounting brackets (material matches factory interior)
- Monitor cables and sub tray pre-installed

7” Custom Headrest Systems

UNIVERSAL FEATURES

- Dual replacement custom headrests (material, color, grain, stitch, piping match factory headrests)
- Dual 7” digital monitors with LED back-lighting
- Resolution (RGB 800 x 480)
- Adjustable viewing angles
- Both monitors incorporate dual channel wireless headphone transmitters
- 2 Wireless remote controls
- Both monitors incorporate wired headphone input (AVXDD7012, AVXDM7012, AVXMM7012 only)
- Full band wireless FM modulator
- Hidden away junction box
  - RCA A/V input
  - RCA A/V output
  - RF output for hardwired FM modulation connection - FMDIRB
  - Game port (game pack with 2 controllers sold separately) - MVGP1

AVXHH7012

Dual DVD Monitor System with Dual HDMI/MHL

- Dual DVD players play DVD’s and CD’s
- USB reader with charging in both monitors
- Certified HDMI/MHL inputs in both monitors

AVXHD7012

Dual DVD Monitor System with Single HDMI/MHL

- Dual DVD players play DVD’s and CD’s
- USB reader with charging in both monitors
- Certified HDMI/MHL inputs in one monitor

AVXHM7012

Single DVD/Single Monitor System with HDMI/MHL

- Monitor 1 DVD player plays DVD’s and CD’s
- Monitor 1 USB reader with charging
- Monitor 1 certified HDMI/MHL inputs
- Monitor 2 RCA A/V input

AVXDD7012

Dual DVD Monitor System

- Dual DVD players play DVD’s and CD’s
- USB reader with charging in both monitors
- RCA A/V inputs in both monitors
- Wired headphone output in both monitors

AVXDM7012

Single DVD/ Single Monitor System

- Monitor 1 DVD player plays DVD’s and CD’s
- Monitor 1 USB reader with charging
- RCA A/V inputs in both monitors
- Wired headphone output in both monitors

AVXMM7012

Dual Monitor Only System

- A/V input source sensing turns monitor on when input signal is detected
- RCA A/V inputs in both monitors
- Wired headphone output in both monitors

7” Active Seat-back Systems

UNIVERSAL FEATURES

- Dual seat-back monitor with custom housing brackets (material color matches factory interior)
- Dual 7” digital monitors with LED back-lighting
- Resolution (RGB 800 x 480)
- Adjustable viewing angles
- Both monitors incorporate dual channel wireless headphone transmitters
- 2 Wireless remote controls
- Both monitors incorporate wired headphone input (AVXSB1DD, AVXSB1DM, AVXSB1MM only)
- Full band wireless FM modulator
- Hidden away junction box
  - RCA A/V input
  - RCA A/V output
  - RF output for hardwired FM modulation connection - FMDIRB
  - Game port (game pack with 2 controllers sold separately) - MVGP1

AVXSB1HH

Dual DVD Monitor System with Dual HDMI/MHL

- Dual DVD players play DVD’s and CD’s
- USB reader with charging in both monitors
- Certified HDMI/MHL inputs in both monitors

AVXSB1HD

Dual DVD Monitor System with Single HDMI/MHL

- Dual DVD players play DVD’s and CD’s
- USB reader with charging in both monitors
- Certified HDMI/MHL inputs in one monitor

AVXSB1HM

Single DVD/Single Monitor System with HDMI/MHL

- Monitor 1 DVD player plays DVD’s and CD’s
- Monitor 1 USB reader with charging
- Monitor 1 certified HDMI/MHL inputs
- Monitor 2 RCA A/V input

AVXSB1DD

Dual DVD Monitor System

- Dual DVD players play DVD’s and CD’s
- USB reader with charging in both monitors
- RCA A/V inputs in both monitors
- Wired headphone output in both monitors

AVXSB1DM

Single DVD/ Single Monitor System

- Monitor 1 DVD player plays DVD’s and CD’s
- Monitor 1 USB reader with charging
- RCA A/V inputs in both monitors
- Wired headphone output in both monitors

AVXSB1MM

Dual Monitor Only System

- A/V input source sensing turns monitor on when input signal is detected
- RCA A/V inputs in both monitors
- Wired headphone output in both monitors

UNIVERSAL FEATURES

- Dual 7” digital monitors with LED back-lighting
- Resolution (RGB 800 x 480)
- Adjustable viewing angles
- Both monitors incorporate dual channel wireless headphone transmitters
- 2 Wireless remote controls
- Both monitors incorporate wired headphone input (AVX7012SUBPKGDD, AVX7012SUBPKGDM, AVX7012SUBPKGMM only)
- Full band wireless FM modulator
- Hidden away junction box
  - RCA A/V input
  - RCA A/V output
  - RF output for hardwired FM modulation connection - FMDIRB
  - Game port (game pack with 2 controllers sold separately) - MVGP1

AVX7012SUBPKGHH

Dual DVD Monitor System with Dual HDMI/MHL

- Dual DVD players play DVD’s and CD’s
- USB reader with charging in both monitors
- Certified HDMI/MHL inputs in both monitors

AVX7012SUBPKGHD

Dual DVD Monitor System with Single HDMI/MHL

- Dual DVD players play DVD’s and CD’s
- USB reader with charging in both monitors
- Certified HDMI/MHL inputs in one monitor

AVX7012SUBPKGHM

Single DVD/Single Monitor System with HDMI/MHL

- Monitor 1 DVD player plays DVD’s and CD’s
- Monitor 1 USB reader with charging
- Monitor 1 certified HDMI/MHL inputs
- Monitor 2 RCA A/V input

AVX7012SUBPKGDD

Dual DVD Monitor System

- Dual DVD players play DVD’s and CD’s
- USB reader with charging in both monitors
- RCA A/V inputs in both monitors
- Wired headphone output in both monitors

AVX7012SUBPKGDM

Single DVD/ Single Monitor System

- Monitor 1 DVD player plays DVD’ and CD’s
- Monitor 1 USB reader with charging
- RCA A/V inputs in both monitors
- Wired headphone output in both monitors

AVX7012SUBPKGMM

Dual Monitor Only System

- Dual replacement custom headrests (material, color, grain, stitch, piping matches factory headrests)
- A/V input source sensing turns monitor on when input signal is detected
- RCA A/V inputs in both monitors
- Wired headphone output in both monitors

SUBHR7012

7” Replacement Headrests

- Dual replacement custom headrests (material, color, grain, stitch, piping match factory headrests)
- Monitor cables and sub tray pre-installed

SUBSB1

7” Active Seat-back Casing

- Dual seat-back with custom mounting brackets (material matches factory interior)
- Monitor cables and sub tray pre-installed

VODEXL10A

10.1" Hi-Def digital LED back-lit monitor with built-in DVD player and HDMI/MHL inputs

- Switchable 16:9 / 4:3 aspect ratio
- Interchangeable shale, pewter and black trim rings and snap-on covers
- 1 User accessible and 1 Hidden HDMI/MHL Input***
- Audio /video inputs and outputs
- USB port with charging capability
- Game port**
- M1/M2 control (when 2 units are installed in 1 vehicle)
- Integrated IR dual channel headphone transmitter
- Built-in 100 channel FM modulator with FM transmitter function*
- Last position memory and auto-on disk insertion
- 2 fold flat wireless headphones
- Remote control

** Use optional FMDIRB for a hardwired FM modulator*
*** Optional game pack required (MVGP1)*
**** Hidden HDMI/MHL input requires optional pigtail harness (HDIP1)*

VODDLX10A

10.1" Hi-Def digital LED back-lit monitor with built-in DVD player

- Switchable 16:9 / 4:3 aspect ratio
- Interchangeable shale, pewter and black trim rings and snap-on covers
- USB reader
- Audio/video inputs and outputs
- Integrated IR headphone transmitter
- Built-in 100 channel FM modulator with FM transmitter functions*
- 2 fold-flat wireless headphones
- Last position memory
- Remote control
- M1/M2 operation (when 2 units are installed in one vehicle)

** Use optional FMDIRB for a hardwired FM modulator*

VOD129A

12.1" wide-screen LCD back-lit monitor / DVD player with built-in dome lights

- Switchable 16:9 / 4:3 aspect ratio
- 30 Built-in video games (24 dual player)
- Auto-on disc insertion
- Interchangeable shale and pewter trim rings and snap-on covers
- Audio / video inputs and outputs
- USB port with charging capability
- Integrated IR transmitter
- Built-in 16 channel FM modulator with FM transmitter function*
- 2 fold-flat wireless headphones
- Wired headphone jack
- Last position memory
- Remote control

** Use optional FMDIRB for a hardwired FM modulator*

AVXMTG13UHD

13.3" Digital LED back-lit monitor / built-in DVD player and HDMI/MHL input

- Switchable 16:9 / 4:3 aspect ratio
- Interchangeable pewter, shale and black trim rings and snap-on covers
- Audio / video inputs for additional source units
- USB / SD inputs for digital media (4GB max on SD card)
- Audio / video output
- Integrated dual channel IR headphone transmitter
- Built-in 16 channel FM modulator with FM transmitter function*
- Remote control with front and rear control
- Wired headphone jack
- Cables, mounting bracket and hardware, trim ring included
- Selectable M1/M2 operation

Use optional FMDIRB for a hardwired FM modulator

AVXMTG10UHD

10" Digital LED back-lit monitor / built-in DVD player and HDMI/MHL input

- Switchable 16:9 / 4:3 aspect ratio
- Interchangeable pewter, shale and black trim rings and snap-on covers
- Audio / video inputs for additional source units
- USB / SD inputs for digital media (4GB max on SD card)
- Audio / video output
- Integrated dual channel IR headphone transmitter
- Built-in 16 channel FM modulator with FM transmitter function*
- Remote control with front and rear control
- Wired headphone jack
- Cables, mounting bracket and hardware, trim ring included
- Selectable M1/M2 operation

Use optional FMDIRB for a hardwired FM modulator

AVXMTG9BA

9" Digital LED back-lit monitor / built-in DVD player

- Switchable 16:9 / 4:3 aspect ratio
- Available in pewter, shale or black
- Audio / video inputs for additional source units
- USB / SD inputs for digital media (2GB max on SD card)
- Audio / video output
- Integrated dual channel IR headphone transmitter
- Built-in 16 channel FM modulator with FM transmitter function*
- Remote control with front and rear control
- Wired headphone jack
- Cables, mounting bracket and hardware, trim ring included
- Selectable M1/M2 operation

Use optional FMDIRB for a hardwired FM modulator

AVXMTGHR9HD

9” Headrest DVD Monitor System with HDMI/MHL Input

- LED back-lit monitors for vibrant picture quality
- Switchable 16:9 / 4:3 aspect ratio
- Adjustable viewing angles
- Audio / video inputs for additional source units
- Audio / video output
- USB inputs for digital media. USB will also provide charging for smart phones or power for HDMI streaming sticks.
- Independent switching
- Built-in FM modulator
- Shale, pewter and black covers included
- Remote control
- Built-in IR headphone transmitter (headphones optional)
- 3.5mm wired headphone jack
- Enclosed post wiring
- Adjustable headrest pole distance
  -130mm – 170mm
  -Pole diameter (external size) -10mm,
  12mm, 12.4mm, 13.8mm, 14mm and 16mm
  -Plastic pole adapter included

AVXMTGHR1DA

7” Headrest with DVD

- Shale, Pewter and Black covers included
- Switchable 16:9 / 4:3 aspect ratio
- Adjustable viewing angles
- Audio / Video inputs for additional source units
- Audio / Video output
- USB/SD inputs for digital media
- Independent switching
- Built-in FM modulator
- Remote control
- 3.5mm to RCA adapter cable (A/V in)
- Enclosed post wiring
- Adjustable Headrest Pole diameter

AVXMTGHR1MA

7” Headrest monitor system

- Shale, Pewter and Black covers included
- Switchable 16:9 / 4:3 aspect ratio
- Adjustable viewing angles
- Audio / Video inputs for additional source units
- Independent switching
- Remote control
- 3.5mm to RCA adapter cable (A/V in)
- Enclosed post wiring
- Adjustable Headrest Pole diameter

Android 4.1

Jelly Bean OS

Your Favorite Apps

8" Panel

Dual Core CPU

Camera

Connectivity

T852SBK

8" Tablet with vehicle mounting system

Audiovox offers the best of versatility in one intelligently designed system. The Audiovox Vehicle Tablet System offers the right mix of fit and function, with a docking solution that safeguards your tablet with style. While the mount remains fastened securely to your seat back, simply squeeze and pull the bracket out of the mount and bring the tablet with you. You can fold the bracket flat against the back of the tablet. You can use the bracket as a keyboard stand, or adjust the angle as desired for horizontal or vertical stand, or adjust the angle as desired for horizontal or vertical viewing.

- Easily docks and undocks to the seat back via "Quick Connect" attachment mechanism.
- Charges while it's in the vehicle dock
- Built-in FM transmitter for audio to play through the vehicle's sound system
- Built-in IR Headphone Transmitter, Dual channel capability for private listening (1 headphone included)

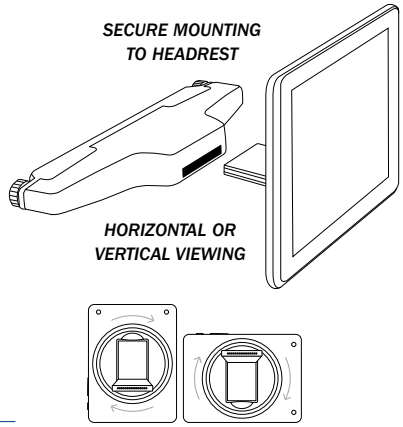

Tablet Features

- 8" Tablet with Android 4.1 or OS
- Google Play
- Dual Core, 1.5 GHz
- RAM: DDR3 1G
- Memory: 8GB (expandable to 32GB)
- Front Facing Speakers (2)
- Camera: Front: 0.3MP / Rear: 2.0 MP
- IPS Panel: 1024 x 768
- Touch Screen: Capacitive 5 point
- Bluetooth
- Microphone
- HDMI output
- USB input
- SD input
- Headphone / Ear bud output
- Internet Access (WIFI is required)

Dock Features

- FM band 100 channel FM transmitter
- Dual Channel IR Headphone transmitter

Includes

- 8" Vertical/Horizontal Rotating Tablet
- Universal Tablet Dock
- Universal Seat Back Dock
- 12 Volt Power Cable
- User Manual
- Home Charging Cable
- Ear bud style In-ear headphone
- Single Channel IR Headphone

- *Adjust bracket, tilt up or down to serve as a stand for tabletop use.*
- *Just flip the case around for the perfect keyboarding angle*
- *Bracket rotates 90° for horizontal or vertical viewing*

Universal Docking Solutions

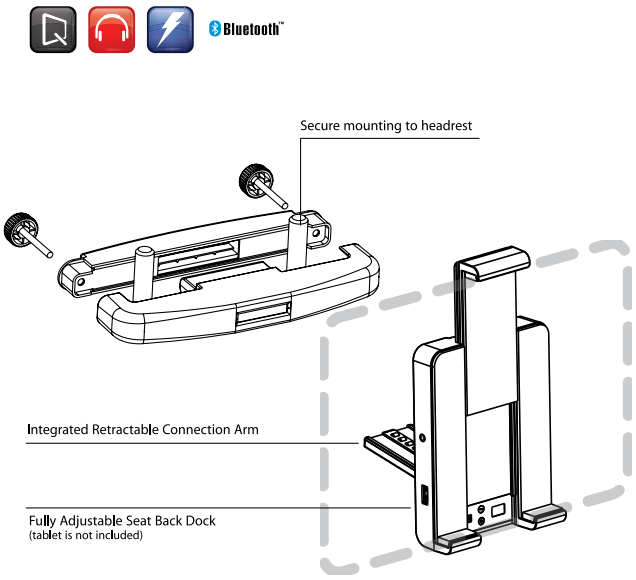

IPDUNV / IPDUNVBT

Universal Vehicle Mount System for Tablets

Audiovox's NEW Universal Mount System offers you docking and charging capabilities for your tablets. The Universal tablet holder has an adjustable clamp mechanism that safely and securely locks your tablet into position. The tablet holder then attaches to a universal low profile seat back docking station.

- Low profile universal seat back docking station
- Easily docks and undocks to the seat-back dock via our patented "Quick Connect" attachment system
- Adjustable viewing angles up and down
- (2) built in USB ports for charging the tablet

Bluetooth Headphone (Included in IPDUNVBT only)

Features

- Universal seat back dock, steel reinforced construction for stability.
- Adjustable tablet dock, allows any tablet to be mounted securely.
- 2 USB charging ports, for charging the tablet in the vehicle.
- Built-in FM transmitter, for playing back audio through the vehicles sound system
- Built-in IR headphone transmitter, dual channel capability for private listening. (IPDUNV only)
- Rechargeable bluetooth headphone for private listening of audio content. (IPDUNVBT only)

Includes

- Universal Tablet Dock
- Universal Seat Back Dock
- 12 Volt Power Cable
- 3.5mm to 3.5mm audio cable
- User Manual
- Rechargeable bluetooth headphone (IPDUNVBT only)
- USB charging cable for bluetooth headphone (IPDUNVBT only)

- *Adjust bracket, tilt up or down to serve as a stand for tabletop use.*
- *Just flip the case around for the perfect keyboarding angle*
- *Bracket rotates 90° for horizontal or vertical viewing*

IR1
Single channel wireless fold-flat headphones
- Auto shut-off
- Upgraded ear piece
- Batteries included

IR2
Dual channel wireless fold-flat headphones
- Auto shut-off
- Upgraded ear piece
- Batteries included

MTGHP1CA
Single channel wireless fold-flat headphones
- Auto shut off
- Batteries included
- Retail clamshell packaging

MTGHP2CA
Dual channel wireless fold-flat headphones
- Auto shut off
- Batteries included
- Retail clamshell packaging

IST2
Noise isolation transformer
- Eliminates ground loops

FMDIRB
FM modulator relay box
- For use with Overheads that have RF outputs
- Converts our RSE system FM transmitter to an FM Modulator

FMM100A
FM modulator
- Wired FM modulator with isolation transformer

MVGP1
Game Pack
- 2 wireless game controllers
- 54 true 32 bit games
- Compatible with model (VODEXL10 and 7” & 8” Series Custom Headrests)

HDIP1
HDMI Connector for VODEXL10
- Connects to the hidden input and allows routing of an HDMI cable to anywhere in a vehicle

Displays

DPAVXHR7012WD

Audiovox working headrest display

- Dimensions: 22” (H) x 13”(W) x 9 ¾”(D)
- Complete with stand, 7” DVD monitor, power supply and remote control

DPAVXHR7012NWD

Audiovox non-working headrest display

- Dimensions: 22”(H) x 13”(W) x 9 ¾”(D)
- Complete with stand and non working 7” DVD monitor

DPAVXHR8DWD

Audiovox working headrest display

- Dimensions: 22”(H) x 13”(W) x 9 ¾”(D)
- Complete with stand, 8” DVD monitor, power supply and remote control

DPAVXHR8ADWD

Audiovox working headrest display

- Dimensions: 22” (H) x 13”(W) x 9 ¾”(D)
- Complete with stand, 8” Android DVD monitor, power supply and remote control

DPMTGHR1

Movies-to-Go headrest display

- Dimensions: 8 ½”(H) x 13”(W) x 9 ¾”(D) Complete with stand, graphic, headrest and power supply

DPMTGHR

Movies-to-Go headrest display

- Dimensions: 8 ½”(H) x 13”(W) x 9 ¾”(D)
- Complete with stand, graphic and headrest

DPMTGHR9HDWD

Movies-to-Go headrest display

- Dimensions: 8 ½”(H) x 13”(W) x 9 ¾”(D)
- Complete with stand, graphic, headrest and power supply

DPMTGHR9HDR

Movies-to-Go headrest display

- Dimensions: 8 ½”(H) x 13”(W) x 9 ¾”(D)
- Complete with stand, graphic and headrest

MVFD4C

Mobile electronics display

- Dimensions: 82” (H) x 51” (W) x 21” (D)
- Can hold: 8 Multimedia units, 1 Overhead, 2 headrests
- Can be branded Audiovox or Advent

Overhead Chart

FEATURES	VODEXL10A	VODDLX10A	VOD129A	AVXMTG9BA	AVXMTG10UHD	AVXMTG13UHD
DISPLAY SIZE	10.1”	10.1”	12.1”	9”	10”	13.3”
PANEL TYPE	Digital Hi-Def	Digital Hi-Def	Analog	Digital	Digital	Digital
BACK-LIGHTING	LED	LED	CCFL	LED	LED	LED
ASPECT RATIO	16:9	16:9	16:9	16:9	16:9	16:9
SCREEN MODE	16:9 or 4:3	16:9 or 4:3	16:9 or 4:3	16:9 or 4:3	16:9 or 4:3	16:9 or 4:3
COLOR SYSTEM	NTSC/PAL	NTSC/PAL	NTSC/PAL	NTSC/PAL	NTSC/PAL	NTSC/PAL
RESOLUTION	1024 x RGB x 600	1024 x RGB x 600	1024 x RGB x 480	640 x RGB x 220	800 x RGB x 480	1280 x RGB x 800
BRIGHTNESS (NIT)	400	400	450	300	300	250
CONTRAST	500:1	500:1	350:1	350:1	500:1	500:1
VIEWING ANGLE L/R/T / B	70/70/70/50	70/70/70/50	65/65/50/65	60/60/50/60	60/60/50/60	60/60/50/60
DVD PLAYER	Slot In	Slot In	Slot In	Slot In	Slot In	Slot In
AUTO ON	Yes	No	Yes	No	No	No
LAST POSITION MEMORY	Yes	Yes	Yes	Yes	Yes	Yes
ENHANCED GRAPHICAL INTERFACE	Yes	No	No	No	No	No
EXTERNAL HDMI/MHL INPUT	Yes	No	No	No	Yes	Yes
INTERNAL HDMI INPUT	Yes	No	No	No	Yes	No
FM MODE	100 Channel	100 Channel	16 Channel	16 Channel	16 Channel	16 Channel
FM OUT (3.5MM)	Yes	Yes	Yes	No	Yes	Yes
GAMES	Game Port	No	30 Built-in	No	No	No
GAME CONTROLLER	Optional	No	1 Wireless	No	No	No
IR WIRELESS HEADPHONE OUTPUT	Dual Channel	Dual Channel	Single Channel	Dual Channel	Dual Channel	Dual Channel
HEADPHONES INCLUDED	(2) Single Channel	(2) Single Channel	(2) Single Channel	No	No	No
TRIM RING	Shale/Pewter/Black	Shale/Pewter/Black	Shale/Pewter	Black	Shale/Pewter/Black	Shale/Pewter/Black
COLOR	Snap-On Bezels Shale/Pewter/Black	Snap-On Bezels Shale/Pewter/Black	Separate Shale/Pewter	Snap-On Bezels Black	Snap-On Bezels Shale/Pewter/Black	Snap-On Bezels Shale/Pewter/Black
USB READER	2.0 up to 32 GB	2.0 up to 32 GB	Yes	Yes	Yes	Yes
USB CHARGING (1 AMP)	Yes	No	Yes	No	No	No
SD CARD	No	No	Yes	Yes	Yes	Yes
M1/M2 OPERATION	Yes	No	No	Yes	Yes	Yes
WIRED HEADPHONE JACK	No	No	Yes	Yes	Yes	Yes
INTERNAL A/V INPUT	Yes	Yes	Yes	Yes	No	No
EXTERNAL A/V AUX INPUT	3 RCA	3 RCA	Yes	No	Yes	Yes
INTERNAL A/V OUTPUT	Yes	Yes	Yes	Yes	Yes	Yes
3.5MM A/V INPUT	No	No	No	No	Yes	Yes
BUILT IN DOME-LIGHTS	Yes	Yes	Yes	Yes	Yes	Yes
Plug-In Harness	Yes	Yes	Yes	Yes	Yes	Yes

ABOUT VOXX ELECTRONICS CORPORATION (VEC)

VOXX Electronics Corporation (VEC) is a wholly-owned subsidiary of VOXX International Corporation (NASDAQ: VOXX), a global supplier of mobile and consumer electronics products. VEC is a recognized leader in the marketing of automotive entertainment, vehicle security and tracking, remote start systems, telematics, and Advanced Driver Assistance Systems (ADAS). VEC's Advanced Solutions Group is focused on developing new strategic partnerships in emerging growth categories in the fields of biometrics, imagery and vocal processing.

VEC sells its products through an extensive distribution network that includes expediters, mass merchandisers, regional mobile electronics chains and independent specialist both domestic and internationally. VOXX Electronics possesses a strong brand portfolio and its products rank among the top ten in almost every category in which they sell. Primary brands include: Advent®, Audiovox®, Car Connection®, CarLink®, Code Alarm®, Invision®, Omega®, Prestige®, and Pursuit®. VOXX Electronics has strategic distribution relationships with EyeLock®, Singtrix® and SiriusXM®.

For additional information, please visit our website at www.voxxelectronics.com

AUDIOVOX INVISION OMEGA ADVENT PURSUIT CODE ALARM PRESTIGE eyeLock

ABOUT VOXX INTERNATIONAL CORPORATION

Voxx℠ International Corporation (NASDAQ:VOXX). The Company that began as Audiovox over 45 years ago has become a worldwide leader in many automotive and consumer electronics and accessories categories, and now into premium high-end audio. The Company's brands hold leading market positions across a wide-spectrum of consumer and automotive segments.

Today, VOXX International is a global company with an extensive distribution network that includes some of the world's Fortune 500 companies and an international footprint in Europe, Asia, Mexico and South America, and a growing brand portfolio, which is now comprised of over 30 trusted brands including Audiovox®, Klipsch®, RCA®, Invision®, Acoustic Research®, Jamo®, Energy®, Mac Audio®, Magnat®, Heco®, Schwaiger®, Hirschmann Car Communication® and Oehlbach®. The Company continues to drive innovation throughout all of its subsidiaries, and maintains its commitment to exceeding the needs of the consumers it serves. For additional information, please visit our Web site at www.voxxintl.com.

VOXX International and all of its family of brands are committed to helping save our environment. To that end, all printed materials produced by us are printed on recyclable paper using only biodegradable ECO friendly coatings. We use soybean rather than petroleum based inks. Our printing presses have "Purge on Press" capability; use no alcohol and therefore result in no vapor pollutants in the air.

IMPORTANT SAFETY NOTICE

Photos and specifications subject to change without notice. Illustration of product finish may vary from actual color. All other brands and product names are trademarks or registered trademarks of their respective owner. All trade names are registered trademarks of respective manufacturers listed. All rights reserved.

VOXX Electronics Corporation℠

A VOXX INTERNATIONAL COMPANY

150 Marcus Boulevard, Hauppauge, NY 11788 • 631-231-7750 • 800-290-6650 • www.voxxelectronics.com

BBB ACCREDITED BUSINESS

For Customer Service
Visit Our Website At
voxxelectronics.com
Product Information, Photos,
FAQ's, Owner's Manuals

MEMA consumer electronics association

©2016 VOXX ELECTRONICS CORPORATION